Campus Design Standards

Division 23-2114 – HVAC Hydronic Distribution

University of San Diego

Department	Name	Signature	Date
PDC Manager	Erin Borzage		6-4-19
PDC Director	Zack Knipe		6/5/19
Facilities AVP	André Hutchinson	André	6/11/2019
Operations VP	Ky Snyder		6/12/19
Director Building Maintenance	Robert Brauer		6/6/19

Division 23-2114 HVAC Hydronic Distribution

1. Introduction

The system consists of a buried prefabricated chilled water and low temperature heating hot water distribution system including service connections to a point 6 inches inside of the building. The system is designed for an operating pressure of 150 psig and an operating temperature of 180 degrees F for hot water and 42 degrees F for chilled water.

2. Contacts

1. The Project Manager (Planning, Design and Construction)

3. Index of References

1. USD Master Plan Design Guidelines *Appendix 1.1*

4. Code/Sustainability References

1. California Building Code
2. LEED Silver
3. Building Energy Efficiency Standards
4. California Fire Code
5. ANSI
6. Pipe Sizing – 2009 ASHRAE Fundamentals Handbook, Chapter 22
7. Pipes, Tubes and Fittings – 2008 ASHRAE HVAC Systems and Equipment Handbook, Chapter 45
8. Hydronics – 2010 California Mechanical Code, Chapter 12

5. Hydronic Distribution Guidelines

5.1 Cased Piping System Materials

A. Description: Factory-fabricated and -assembled piping system with carrier pipe, insulation, and casing.

B. Materials

1. Carrier Pipe

a. Chilled Water Pipe shall be PVC pressure pipe made from class 12454-A or class 12454-B materials providing a hydrostatic design basis (HDB) of 4000 psi. The PVC pipe outside diameters shall conform to cast-iron-pipe-equivalent (CI) outside diameter (OD) dimensions. The PVC wall thickness for pipe sizes up to 12" shall be equivalent to a dimension-ratio (DR) series 18 (150 psi rated). The PVC wall thickness for pipe sizes 14" and larger shall be equivalent to dimension-ratio (DR) series 26 (160 psi rated). One gasket shall be furnished with each length of pipe. Gaskets shall be manufactured to conform to the requirements of ASTM F477.

1) Provide bell and spigot type end connections for pipe, fittings, flanges, and couplings. Threaded piping, including pipe, fittings, flanges, and couplings, will not be permitted.
2) Flanged Connections: Provide flat face flanged connections between plastic piping and metal piping suitable for connection to ASME Class 150 flanges.

b. Heating Hot Water Pipe shall be preinsulated type K, annealed-temper copper tubing, wrought-copper fittings and brazed joints. Use the fewest possible joints. Copper pipe shall be brazed. Wrought copper or cast copper alloy solder joint pressure fittings shall conform to AWS B2.2/B2.2M and CDA A4015.

2. End Seals
   c. At all pipe terminations, end seals shall be designed and factory fabricated to prevent the ingress of moisture into the system. Painted and/or mastic type end seals shall not be allowed.
3. Insulation
   d. Insulation shall be rigid 90% to 95% closed cell polyurethane with a nominal 2.0lb/FT^3 density and a coefficient of thermal conductivity (K) of .14 BTU(HR.)(SQ.Ft) (F/IN.) At 73°F.

Pipe Insulation Selection Table								
FLUID TEMPERATURE RANGE, (°F)	CONDUCTIVITY RANGE (in Btu-inch per hour per square foot per °F)	INSULATION MEAN RATING TEMPERATURE (°F)	NOMINAL PIPE DIAMETER (in inches)					
			Run outs up to 2	1 and less	1.25-2	2.50-4	5-6	8 and larger
			INSULATION THICKNESS REQUIRED (in inches)					
Space heating systems (steam, steam condensate and hot water)								
Above 350	0.32 – 0.34	250	1.5	2.5	2.5	3.0	3.5	3.5
251 - 350	0.29 – 0.31	200	1.5	2.0	2.5	2.5	3.5	3.5
201 - 250	0.27 – 0.30	150	1.0	1.5	1.5	2.0	2.0	3.5
141 - 200	0.25 – 0.29	125	0.5	1.5	1.5	1.5	1.5	1.5
105 - 140	0.24 – 0.28	100	0.5	1.0	1.0	1.0	1.5	1.5
Service water-heating systems (recirculating sections and the first 8' of piping from the storage tank for non-recirculating systems)								
Above 105	0.24 – 0.28	100	0.5	1.0	1.0	1.5	1.5	1.5
CHW: Space cooling systems (chilled water,)								
40 – 60	0.23 – 0.27	75	1.0	1.0	1.5	1.5	1.5	1.5
Below 40	0.23 – 0.27	75	1.0	1.0	1.5	1.5	1.5	1.5

4. Outer protective jacket
   e. The outer jacket shall be High Density PolyEthylene (HDPE).

f. PE: Straight sections of the insulated piping system shall be seamless High Density PolyEthylene (HDPE). The minimum thickness for PE jackets shall be 0.125 Inch.

5. Fittings
   g. All fittings for the Chilled Water PVC carrier pipe shall be un-insulated Ductile iron conforming to ANSI/AWWA C111/A21.11 and furnished with Styrene-Butadiene (SBR) gaskets. All fittings shall be installed un-insulated and must be placed in concrete thrust blocks by the installing contractor.
6. Joints
   h. After carrier pipes have been hydrostatically tested, all joints shall be field insulated. After insulating, the installer shall then seal the field joint area with a heat actuated shrink polyethylene blanket. All insulation and shrink materials for making the field joint shall be furnished by the pre-insulated pipe manufacturer.
7. Valves
   i. Cast-Iron Gate Valves: MSS SP-70; Class 125; ASTM A 126 cast-iron body and bonnet, solid cast-iron wedge, brass-alloy stem, outside screw and yoke, PTFE-impregnated packing with two-piece packing gland assembly, flanged-end connections; with cast-iron handwheel.
8. Manholes: Black steel with lifting eyes.
   j. Finish: Spray-applied urethane, minimum 30 mils (0.75 mm) thick.
   k. Access: 30-inch- (750-mm-) diameter waterproof cover with gasket, ladder, and two 6-inch (150-mm) vents, one high and one low, extending above grade with rain caps.
   l. Conduit Stub-Outs and Seals: Welded steel with drain and vent openings.
   m. Sump: 12 inches (300 mm) in diameter, 12 inches (300 mm) deep.
   n. Floatation Anchor: Oversized bottom keyed into concrete base.

2. Valve Vaults
   a. Material: Pre-cast concrete
   b. Access:
      1) Hinged steel traffic weight vault cover, AASHTO H20 traffic rating required for roadway locations.
      2) Provide ladder access rungs for vaults over 3'0" in depth.
   c. Sump: provide minimum 3'0" gravel filled wet well

5.2 Hydronic Distribution System Design

1. Design Drawings
   a. Design drawings shall indicate general location and arrangement of piping. Indicated locations and arrangements shall be used to size pipe and calculate friction loss, expansion, pump sizing, and other design considerations. Install piping as indicated, unless deviations to layout are approved on Coordination Drawings. Show pipe sizes, locations, and elevations. Show other piping in same trench and clearances from hydronic distribution piping. Indicate interface and spatial relationship between manholes, piping, and proximate structures.
   b. Prior to the beginning of a project, an existing conditions survey should be started and be completed by the end of schematic design. All existing conditions surveys

shall indicate the location of Surface utilities or surface accessible indications of underground utilities (i.e. Manholes, valves, vents, ect.). If trenches or other means of excavation are accessible at the time of survey, locations shall be located within 1ft horizontal and vertical. Where subsurface utilities are not exposed for location, industry standards for location surveys and documentation are acceptable. The Project Manager and Civil Engineer are to be notified of any discrepancies discovered between the field survey and the University Base Map. Should a trench or other excavation be planned during the course of the project, it is expected that the actual location of the subsurface utilities will be obtained and included in subsequent revisions of the plan.

2. Shop Drawings: For underground hydronic piping. Signed and sealed by a professional engineer.
   a. Calculate requirements for expansion compensation for underground piping.
   b. Show expansion compensators, offsets, and loops with appropriate materials to allow piping movement in the required locations. Show anchors and guides that restrain piping movement with calculated loads, and show concrete thrust block dimensions.
   c. Show pipe sizes, locations, and elevations. Show piping in trench, conduit, and cased pipe with details showing clearances between piping, and show insulation thickness.
   d. Profile Drawings: Show system piping in elevation. Draw profiles at horizontal scale of not less than 1 inch equals 50 feet (1:500) and at vertical scale of not less than 1 inch equals 5 feet (1:50). Indicate manholes and piping. Show types, sizes, materials, and elevations of other utilities crossing hydronic piping.
3. Hydronic Distribution System Sizing
   a. Size piping based on 4 ft per 100' of pressure drop or 6 ft/sec, whichever is more conservative.
   b. Use the Tables 1 and 2 below to size hydronic distribution systems. Pressure Drop is calculated using the Hazen-Williams equation and a roughness coefficient of 130 for copper and 140 for plastic pipe.

Table 1: Underground Heating Hot Water Pipe Sizing Table			
Type K Copper			
Size	**GPM**	**Pressure Drop (ft H_2O/100')**	**Velocity (ft/sec)**
1	3.5 – 6.8	1.2 – 4.0	1.4 – 2.6
1 1/4	6.9 – 11.9	1.5 – 4.0	1.8 – 3.0

1 1/2	12.0 – 19	1.7 – 4.0	2.2 – 3.4
2	20 – 39	1.2 – 4.0	2.1 – 4.0
2 1/2	40 – 69	1.5 – 4.0	2.7 – 4.6
3	70 – 109	1.7 – 4.0	3.3 – 5.1
3 1/2	110 – 162	1.9 – 4.0	3.8 – 5.6
4	163 – 224	2.1 – 3.8	4.4 – 6.0
5	225 – 349	1.3 – 3.0	3.9 – 6.0
6	350 – 500	1.2 – 2.4	4.2 – 6.0
8	501 – 875	0.6 – 1.7	3.4 – 6.0

Table 2: Underground Chilled Water Pipe Sizing Table			
PVC Plastic Pipe			
Size	**GPM**	**Pressure Drop (ft H_2O/100')**	**Velocity (ft/sec)**
3	74- 113	1.8- 4	3.6- 5.5
4	114- 215	1.0-3.4	3.2- 6
5	216- 340	1.1-2.6	3.8- 6
6	341- 485	1.1- 2.1	4.2- 6
8	486- 850	.54- 1.5	3.4- 6
10	851- 1340	.5- 1.2	3.9- 6
12	1341- 1900	.50- 1.0	4.2- 6
14	1901- 2290	.91- .86	5- 6

16	2291- 3010	.44- .74	4.6- 6
18	3011- 4150	.34- .6	4.4- 6

5.3 Pre-Insulated Piping Installation

A. All pipes and accessories shall be installed in accordance with the manufacturer's recommendations.

B. All branch take-offs shall be from the top of the main runs.

C. All steel piping adjoining this system shall be anchored at, or near the point of connection to avoid any external forces on the PVC carrier pipes.

D. The contractor shall pour concrete anchor blocks at every change of direction after testing of the pipe. The anchor blocks are to be sized in accordance with forces resulting from thermal stresses, existing soil conditions and with the engineer's approval.

E. Immediately after the system has been installed in the ditch, a partial backfill shall be made in the middle of each unit, leaving the joints exposed for inspection during the hydrostatic tests. Hydrostatic tests of 150 PSIG shall be required for a period of four hours. No leakage shall be allowed.

F. A 6 inch layer of sand or fine gravel shall be placed and tamped in the trench to provide a uniform bedding for the pipe. The entire trench width shall be evenly backfilled with a similar material as the bedding in 6 inch compacted layers to a minimum height of 12 inches above the top of the insulated piping system. The remaining trench shall be evenly and continuously backfilled in uniform layers with suitable excavated soil free of large boulders, rocks over 6" in diameter or foreign matter. Do not use tracked or wheeled vehicles for tampering.

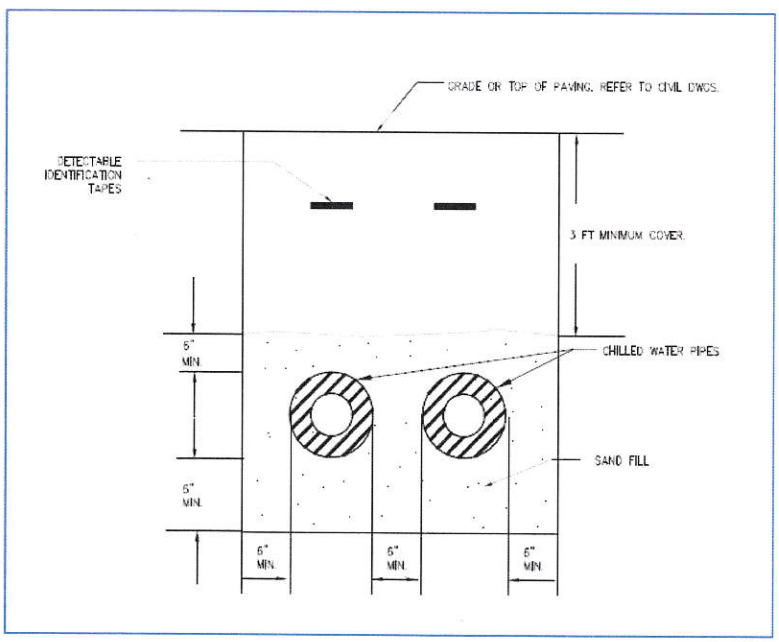

Figure 1. Typical Utility Trench Section

G. Contractor shall provide steel sleeve and Link-Seals for all piping through vaults and building walls to accommodate the pre-insulated pipe.

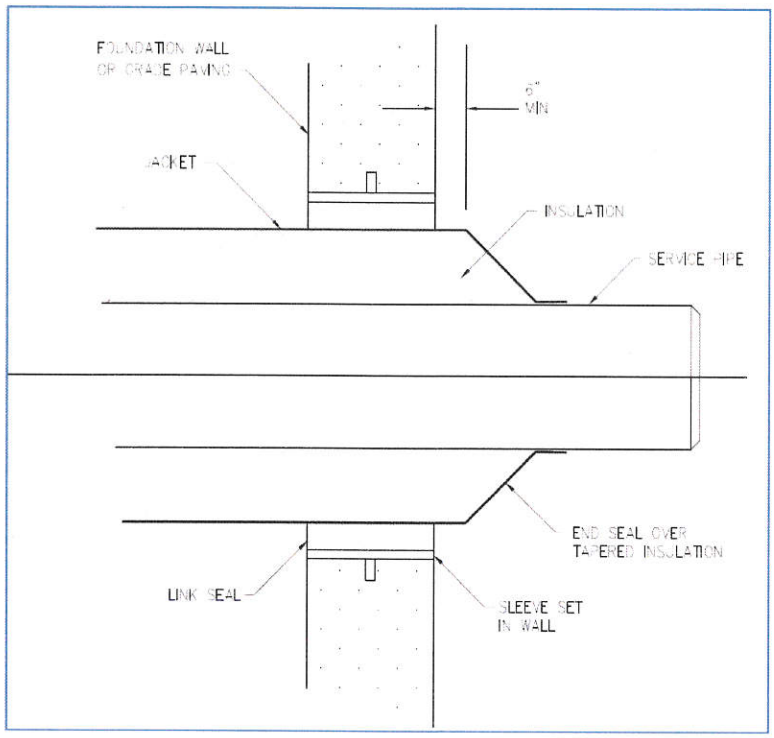

Figure 2. Typical End Seal

H. A direct factory employee, of the pre-insulated piping manufacturer, shall be on site a minimum of one (1) day during the installation of the underground pre-insulated pipe. He shall instruct the contractor in all phases of the installation and witness trench preparation, field joint closures, testing, and backfill. A written report shall be submitted to the owner and engineer stating that the piping system is being installed according to the manufacturer's recommendations.

5.4 Piping Installation

A. Install piping at uniform grade of 0.2 percent upward in direction of flow or as indicated.
B. Install components with pressure rating equal to or greater than system operating pressure.
C. Install piping free of sags and bends.
D. Locate groups of pipes parallel to each other, spaced to permit valve servicing. Install piping to allow application of insulation plus 6-inch clearance around insulation.
E. Install fittings for changes in direction and branch connections. Install thrust blocks at the locations shown or recommended by the pipe system manufacturer. Thrust blocks may not be required on all systems, and the need for thrust blocks shall be as recommended by the system manufacturer. Thrust blocks, if necessary, shall be installed at all changes in direction, changes in size, valves and terminal ends, such as plugs, caps and tees. Thrust blocks shall be concrete having a compressive strength of not less than 2000 psi after 28 days. Thrust blocks shall be placed between solid ground and the fitting to be anchored. Unless otherwise indicated or directed, the base and the thrust bearing sides of the thrust

blocks shall be poured directly against undisturbed earth. The sides of the thrust blocks not subject to thrust may be poured against forms. Thrust blocks shall be placed so that the joints for all fittings will be accessible for repair wherever possible. No pipe joint shall be embedded in concrete unless the assembly has previously been hydrostatically tested. The thrust blocks shall provide for transfer of thrusts and reactions without exceeding the allowable stress of the concrete and shall be installed in accordance with pipe manufacturer's instructions. In muck or peat, all thrusts shall be resisted by piles or tie rods to solid foundations or by removal of peat or muck which shall be replaced with ballast of sufficient stability to resist thrusts.

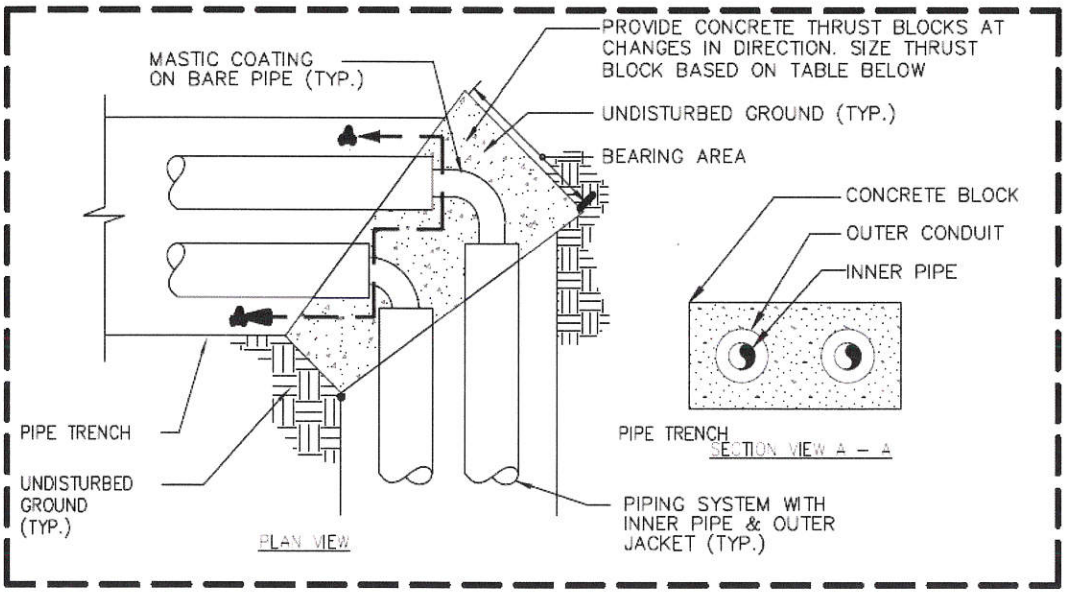

THRUST BLOCK SIZING TABLE
(SQUARE FEET OF CONCRETE BEARING)

PIPE SIZE DIA. (IN)	TEE & 90° ELBOW	45° ELBOW
4 & LESS	2.5	1.5
6	5.0	2.7
8	8.5	4.5

REQUIRED BEARING AREA FOR MULTIPLE PIPE CONFIGURATIONS SHALL BE BASED ON THE SUM OF EACH INDIVIDUAL PIPE THRUST BEARING AREA REQUIREMENT PER TABLE AT LEFT

(2–8" ELBOWS = 17 SQFT.)

NOTES:

1. TABLE ABOVE BASED ON 100 PSI PIPING MAXIMUM TEST PRESSURE.
2. SOIL BEARING STRENGTH AT 1000 LBS PER SQ. FT.
3. CARRY BEARING SURFACES TO UNDISTURBED GROUND. NO EXCEPTIONS.
4. KEEP CONCRETE CLEAR OF PIPE JOINTS.
5. PROVIDE ADDITIONAL THRUST BLOCK REQUIREMENTS PER PIPE MANUFACTURER'S WRITTEN RECOMMENDATIONS.
6. CURE CONCRETE THRUST BLOCKS PRIOR TO TESTING.
7. WRAP ELBOWS WITH VISQUEEN PRIOR TO POURING CONCRETE THRUST BLOCKS.

Figure 3. Concrete Thrust Block Requirements

I. Expansion Loops - If expansion compensation is needed, expansion loops and expansion bends (Z- and L- type) shall be factory fabricated of casing, insulation, and carrier piping identical to that furnished for straight runs. Expansion loops and bends shall be properly

designed in accordance with the allowable stress limits indicated in ASME B31.1 for the type of pipe used. Expansion loops and bends shall be shipped to the jobsite in the maximum size sections feasible to minimize the number of field joints. The expansion loops and bends casing and insulation where applicable, shall be suitably sized to accommodate pipe movement. Field joints shall be made in straight runs of the expansion loops and bends, and the number shall be kept to a minimum. For steel pipe, cold springing shall not be allowed when sizing the expansion loops and bends, but piping shall be cold sprung one-half the calculated maximum operational expansion during field assembly. Pipe stress in expansion loops and bends shall conform to the requirements for expansion loops specified in ASME B31.1.

J. Anchors - Anchor design shall be in accordance with the published data of the manufacturer and for prefabricated systems shall be factory fabricated by the prefabricated system manufacturer. In all cases, the design shall be such that water penetration, condensation, or vapor transmission will not wet the insulation.

K. Install drains at low points consisting of tee fitting, 3/4-inch NPS ball valve, and short 3/4-inch NPS threaded nipple and cap.

L. Make reductions in pipe sizes using eccentric reducer fitting installed with level side up.

M. Install couplings according to manufacturer's written instructions.

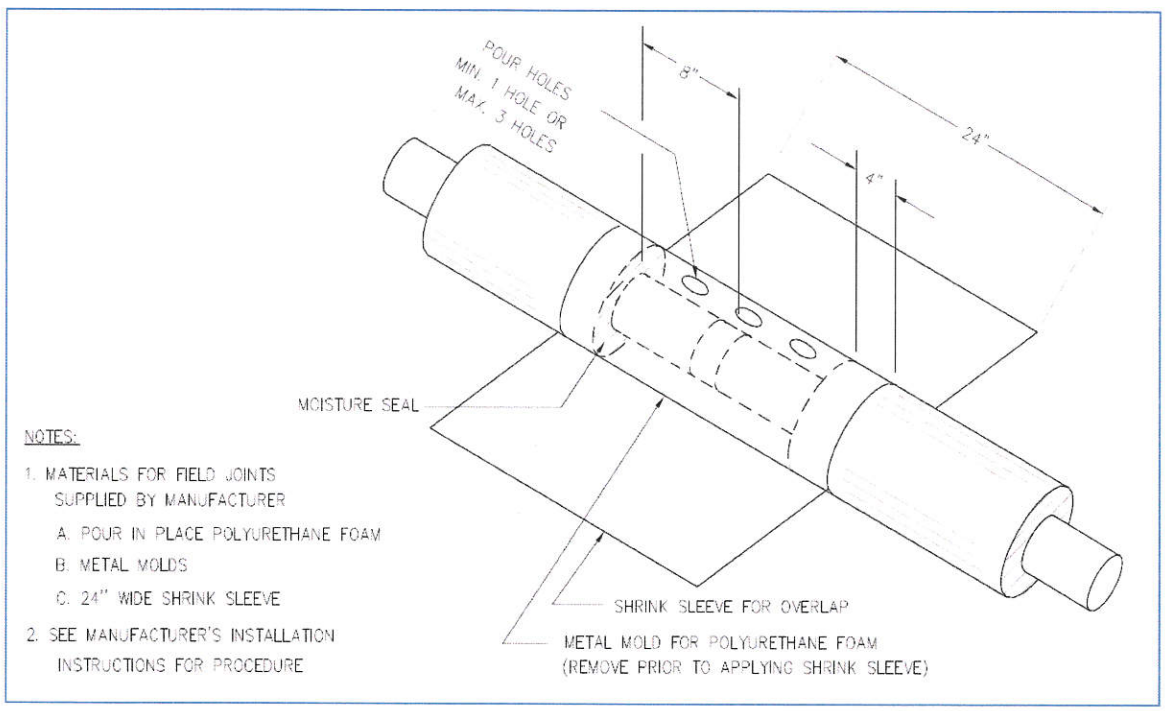

Figure 4. Coupling Insulation Requirements

N. Valve Applications: Drawings indicate valve types to be used. Where specific valve types are not indicated, the following requirements apply:

1. Install valves at each branch connection to supply mains, and elsewhere as indicated.
   d. Shutoff Duty, 2-1/2-Inch NPS and Larger: Cast-iron-body gate valves.

5.5 Identification Installation

A. Install continuous plastic underground warning tapes during back-filling of trenches for underground hydronic distribution piping. Locate 6 to 8 inches below finished grade, directly over piping.

5.6 Field Quality Control

A. Prepare hydronic piping for testing according to ASME B31.9 and as follows:
   1. Leave joints, including welds, uninsulated and exposed for examination during test.
   2. Fill system. Use ambient temperature water. Where there is risk of freezing, air or safe, compatible liquid may be used.
   3. Isolate equipment. Do not subject equipment to test pressure.
   4. Install relief valve set at pressure no more than one-third higher than test pressure.

B. Test hydronic piping as follows:
   1. Subject piping system to hydrostatic test pressure, that is not less than 1.5 times design pressure, or 150 psi minimum.
   2. After hydrostatic test pressure has been applied for 10 minutes, examine piping, joints, and connections for leakage. Eliminate leaks by tightening, repairing, or replacing components as appropriate, and repeat hydrostatic test until there are no leaks. Maintain test pressure for a minimum of four hours, with no leaks.
   3. Prepare a written report of testing.

5.7 Cleaning

A. Inspect finish of exposed, hydronic piping, including outlets, valves, specialties, and devices, after installation is complete. Remove burrs, dirt, and debris. Repair damaged finishes including chips, scratches, and abrasions.

B. Clean and flush hydronic piping. Remove, clean, and replace strainer screens. Remove disposable fine-mesh strainers in pump suction diffusers after cleaning and flushing piping but before balancing.

C. General: The Contractor shall provide all labor, materials, fuels, chemicals, tools, equipment, and services and do all work necessary to clean, flush, and fill chilled water system in accordance with this section. Provide such hoses, temporary pipelines, etc., as may be required for conveying the water to the site of the work.
   a. Cleaning and flushing shall not be performed until piping systems have been tested and until they have been observed by the University's Representative.
   b. It is the intent of these Design Standards to describe the University's preferred method of flushing and cleaning of the chilled water system, to identify the chemicals to be added to the cleaning water, to describe the method of circulating the cleaning water, to provide a method of checking the time for circulating the cleaning water, and to describe the method of flushing the system.
   c. Furnish and install temporary drainage and bypass piping required between the two lines at each end to facilitate the cleaning and flushing.

D. Equipment: Provide all equipment necessary for cleaning and flushing of the pipelines as described herein. The equipment shall include, but not be limited to the following:

a. Pump of sufficient quantity to circulate water at a minimum velocity of 3 foot per second in the pipe.
b. Pump suitable for injecting the chemical solution into the circulating water at such rate as may be required to inject all the chemicals described below within a period of two hours.
c. Such hoses, temporary pipelines, etc., as may be required for connection from the pumping equipment to the chilled water system.
d. Hoses as may be required to dispose of drainage water.
e. Strainers in the temporary pump connections provided with 80 mesh removable screens.
f. Tools and equipment necessary for making connections, operating the valves, and performing all other operations, incidental to the completion of the cleaning and flushing operations as described in this Specification.
g. Provide chemicals for the cleaning of the chilled water pipelines in accordance with the following:
    i. Nitrate: 700-1200ppm
    ii. Wetting agent equal to Ingopel 630: 1 oz. per 50 gal. of water.
    iii. Chemicals shall be dissolved in water in vessels separate from the chilled water system and shall be introduced into the circulation water in solution form.
h. Temporary boiler for heating the solution used for cleaning the high temperature water system.
i. Provide chemicals for the cleaning of the high temperature water pipelines in accordance with the following:
j. Soda Ash: 1 lb. per 1,000 lb. of water.
k. Tetra Sodium Phosphate: 1.8 lb. per 1,000 lb. of water.
l. Sodium Sulfite: 0.6 lb. per 1,000 lb. of water.
m. Sodium Nitrite: 0.6 lb. per 1,000 lb. of water.
n. Chemicals shall be dissolved in water in vessels separate from the high temperature water system and shall be introduced into the circulation water in solution form.
o. Procedure:
p. Make connections for the circulating pump, the introduction of water, and provisions for adding chemicals in the supply and return lines. Fill the entire system with water and circulate at a minimum velocity of one-half foot per second in each pipeline for a period of 24 hours. During this period, periodically open each of the drains and remove sludge as it accumulates, adding water from the source to make up for the water drained off. Operate the valves to force the circulation to all parts of the system. At the conclusion of this first 24-hour circulation of untreated water, drain the entire system, opening all drains and air valves to achieve the most rapid drainage possible.
q. Refill the system with water. Start the circulation pump and add the prescribed chemicals at a uniform rate. On the completion of the introduction of chemicals, heat

the chemically charged water for a period of 48 hours. During this period, periodically open each of the drains and remove sludge as it accumulates, adding water and chemicals to make up for the solution drained off. At the conclusion of the 48-hour period, drain the system again as before.

r. Refill with fresh water and follow the same procedure as described for the first 24-hour period.
   i. During the entire period of circulation, consisting of a total of 80 hours, remove and clean the screens periodically.
   ii. Quantity of water for calculation of amounts of chemicals required may be determined by metering the input water or by computing the volume of the system.

E. Restoration and Cleanup: At the conclusion of the cleaning and flushing operation, the Contractor shall remove the temporary bypass lines and drains.

F. The Contractor shall remove all his equipment, surplus chemicals, and clean up the areas used for his operation and leave such areas clean and orderly.

G. Filling the System: At the conclusion of the cleaning operation, fill the chilled water system from the existing system approved by the University's Representative. During the filling operation, operate the air vent valves and exhaust all air such that at the completion of the filling operation, all pipelines are completely filled with treated water.

H. Operational Test: After the high temperature water system has been filled with treated water from the existing distribution system, as approved by the University's Representative, have personnel available on a 24-hour basis for a period of two days to take any corrective action that might be required during the period of reaching system operational pressure and temperature. This operational test shall be conducted prior to installing the covers on the precast concrete trench sections.

5.8 Commissioning

A. Fill systems.

B. Open valves to fully open position.

C. Provide full testing and commissioning of piping systems in accordance with manufacturers instruction.

6. Types of Cased Piping Systems

1. Cased Piping Systems:
   a. Perma-Pipe/Ric Will.
   b. Rovanco Corp.
   c. Thermal Pipe Systems, Inc.

7. Requirements for As-built Drawings

Prior to the completion of construction and occupancy, the subcontractor is required to provide the Project Manager a detailed schedule of materials used in each space of the project, including the manufacturer, supplier, color name and number, pattern and size applied. An electronic version of the final room schedule is to be provided as part of the "as-built" documentation for the project. *See Section XXX for Documentation and Archiving*

END OF DOCUMENT